THE DATASHEET OF

LAN8720AI-CP

www.win-source.net 0086-755-83957316

DATASHEET

5 PIN SOP HIGH SPEED 1Mbit/s TRANSISTOR PHOTOCOUPLER ELM45X series

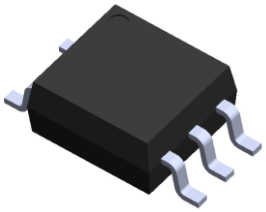

Schematic

ELM45X series

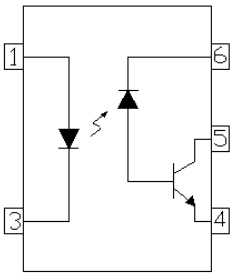

Pin Configuration
1. Anode
3. Cathode
4. Gnd
5. Vout
6. V_{CC}

Features

- High speed 1Mbit/s
- High isolation voltage between input and output (Viso=3750 Vrms)
- High CMR 15KV/us at V_{CM}=1500V (ELM453)
- Guaranteed performance from 0°C to 70°C
- Wide operating temperature range of -40°C to 85°C
- Pb free and RoHS and Halogen free compliant
- cUL approved (No. E214129)
- VDE approved (No. 40028116)
- SEMKO approved
- NEMKO approved
- DEMKO approved
- FIMKO approved

Description

The ELM452 and ELM453 devices each consist of an infrared emitting diode, optically coupled to a high speed photo detector transistor. A separate connection for the photodiode bias and output-transistor collector increase the speed by several orders of magnitude over conventional phototransistor couplers by reducing the base-collector capacitance of the input transistor.The devices are packaged in industry standard 5pin SOP packages and are suitable for surface mounting.

Applications

- Line receivers
- Field bus communication and control.
- Power transistor isolation in motor drives
- Replacement for low speed phototransistor photo couplers
- High speed logic ground isolation
- Analog signal ground isolation

Copyright © 2010, Everlight All Rights Reserved. Release Date : May 13, 2013. Issue No: DPC-0000113 Rev.3

Absolute Maximum Ratings (Ta=25°C unless otherwise noted)

Parameter		Symbol	Rating	Unit
Input	Forward current	I_F	25	mA
	Peak forward current (50% duty, 1ms P.W)	I_{FP}	50	mA
	Peak transient current (≤1μs P.W,300pps)	I_{Ftrans}	1	A
	Reverse voltage	V_R	5	V
	Power dissipation	P_{IN}	45	mW
Output	Power dissipation	P_O	100	mW
	Average Output current	$I_{O(AVG)}$	8	mA
	Peak Output current	$I_{O(PK)}$	16	mA
	Output voltage	V_O	-0.5 to 20	V
	Supply voltage	V_{CC}	-0.5 to 30	V
Isolation voltage *1		V_{ISO}	3750	V rms
Operating temperature		T_{OPR}	-40 ~ +85	°C
Storage temperature		T_{STG}	-55 ~ +125	°C
Soldering temperature *2		T_{SOL}	260	°C

Notes:

*1 AC for 1 minute, R.H.= 40 ~ 60% R.H. In this test, pins 1 & 3 are shorted together, and pins 4, 5 & 6 are shorted together.

*2 For 10 seconds.

Copyright © 2010, Everlight All Rights Reserved. Release Date : May 13, 2013. Issue No:DPC-0000113 Rev.3

Electrical Characteristics (T_A=0 to 70°C unless specified otherwise)

Input

Parameter	Symbol	Min.	Typ.	Max.	Unit	Condition
Forward Voltage	V_F	-	1.45	1.8	V	I_F = 16mA
Reverse Voltage	V_R	5.0	-	-	V	I_R = 10μA
Temperature coefficient of forward voltage	$\Delta V_F/\Delta T_A$	-	-1.6	-	mV/°C	I_F =16mA

Output

Parameter	Symbol	Min	Typ.	Max.	Unit	Condition
Logic High Output Current	I_{OH}	-	0.001	0.5	μA	I_F=0mA, V_O=V_{CC}=5.5V, T_A=25°C
		-	0.001	1		I_F=0mA, V_O=V_{CC}=15V, T_A=25°C
		-	-	50		I_F=0mA, V_O=V_{CC}=15V
Logic Low Supply Current	I_{CCL}	-	100	200	μA	I_F=16mA, V_O=Open, V_{CC}=15V
Logic High Supply Current	I_{CCH}	-	0.05	1	μA	I_F=0mA, V_O=Open, V_{CC}=15V, T_A=25°C
		-	-	2		I_F=0mA, V_O=Open, V_{CC}=15V

Transfer Characteristics

Parameter	Symbol	Min	Typ.	Max.	Unit	Condition
Current Transfer Ratio	CTR	20	-	50	%	I_F = 16mA ,V_O = 0.4V, V_{CC}=4.5V, T_A=25°C
		15	-	-		I_F = 16mA ,V_O = 0.5V, V_{CC}=4.5V
Logic Low Output Voltage	V_{OL}	-	-	0.4	V	I_F = 16mA ,I_O = 3mA, V_{CC}=4.5V, T_A=25°C
		-	-	0.5		I_F = 16mA ,I_O = 2.4mA, V_{CC}=4.5V

Copyright © 2010, Everlight All Rights Reserved. Release Date : May 13, 2013. Issue No:DPC-0000113 Rev.3

Switching Characteristics (T_A=0 to 70°C unless specified otherwise, Vcc=5V)

Parameter		Symbol	Min	Typ.	Max.	Unit	Condition
Propagation Delay Time to Logic Low (*3)(Fig.8)		T_{PHL}	-	0.4	0.8	µs	I_F=16mA, R_L=1.9KΩ, T_A=25°C
			-	-	1.0		I_F=16mA, R_L=1.9KΩ
Propagation Delay Time to Logic High (*3)(Fig.8)		T_{PLH}	-	0.35	0.8	µs	I_F=16mA, R_L=1.9KΩ, T_A=25°C
			-	-	1.0		I_F=16mA, R_L=1.9KΩ
Common Mode Transient Immunity at Logic High(*4) (Fig.9)	ELM452	CM_H	5,000	-	-	V/µs	I_F = 0mA , V_{CM}=10Vp-p, R_L=1.9KΩ, T_A =25°C
	ELM453		15,000	-	-		I_F = 0mA , V_{CM}=1500Vp-p, R_L=1.9KΩ, T_A =25°C
Common Mode Transient Immunity at Logic Low (Fig.9)*3	ELM452	CM_L	5,000	-	-	V/µs	I_F = 16mA , V_{CM}=10Vp-p, R_L=1.9KΩ, T_A =25°C
	ELM453		15,000	-	-		I_F = 16mA , V_{CM}=1500Vp-p, R_L=1.9KΩ, T_A=25°C

* Typical values at T_A = 25°C

Copyright © 2010, Everlight All Rights Reserved. Release Date : May 13, 2013. Issue No:DPC-0000113 Rev.3

Typical Electro-Optical Characteristics Curves

Figure 1. Forward Current vs Forward Voltage

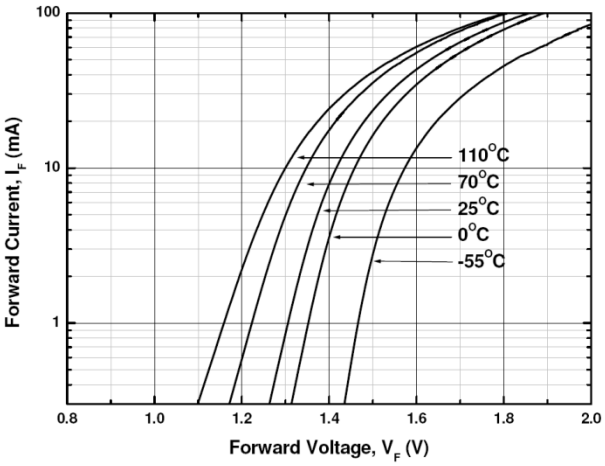

Figure 2. Current Transfer Ratio vs Forward Current

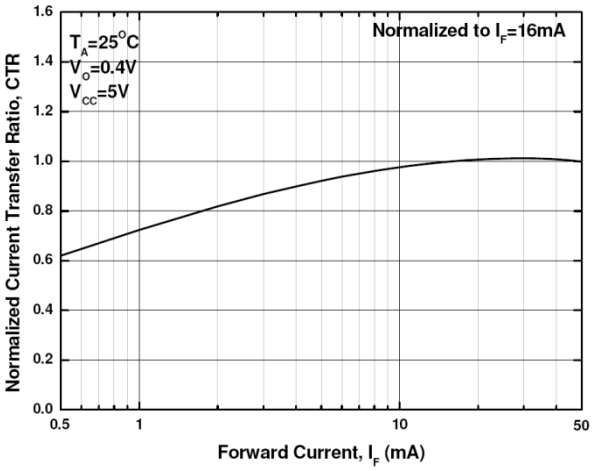

Figure 3. Current Transfer Ratio vs Ambient Temperature

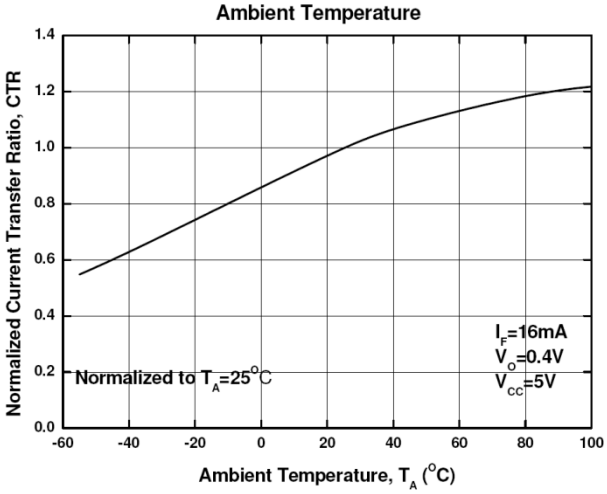

Figure 4. Output Current vs Output Voltage

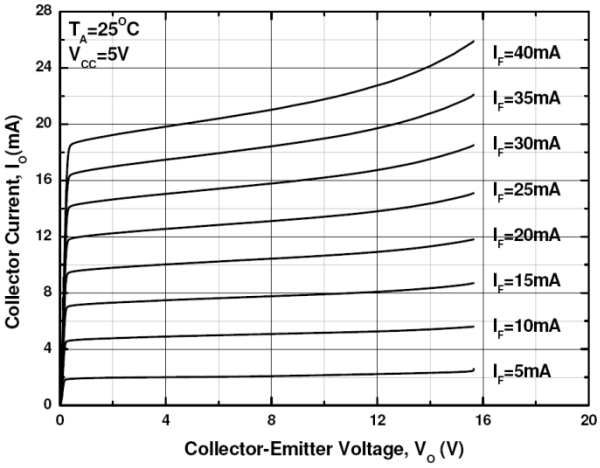

Figure 5. Logic High Output Current vs Ambient Temperature

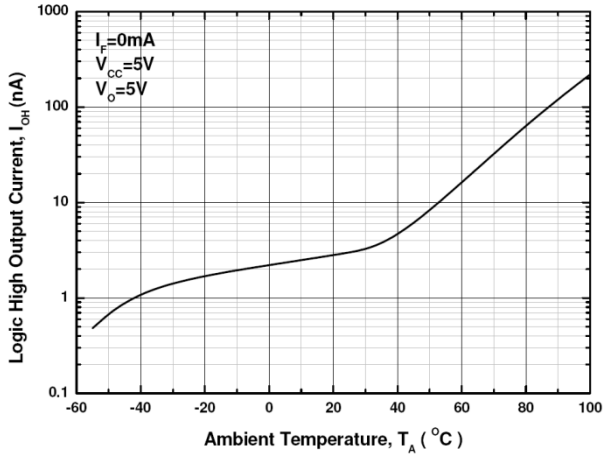

Figure 6. Propagation Delay vs. Load Resistance

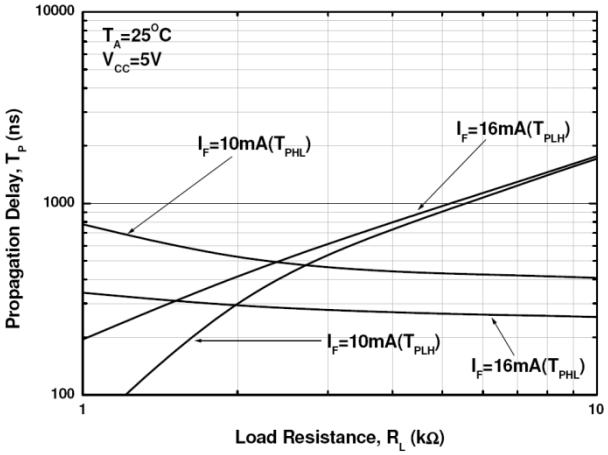

Copyright © 2010, Everlight All Rights Reserved. Release Date : May 13, 2013. Issue No:DPC-0000113 Rev.3

Figure 7. Propagation Delay vs. Temperature

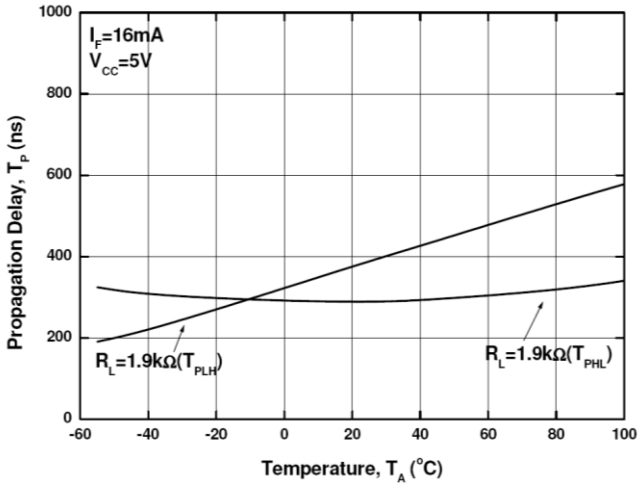

Figure 8. Frequency Response

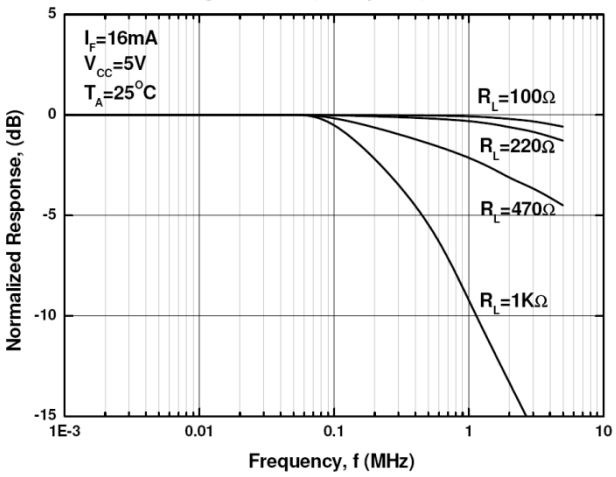

Figure 9 Switching Time Test Circuit & Waveform

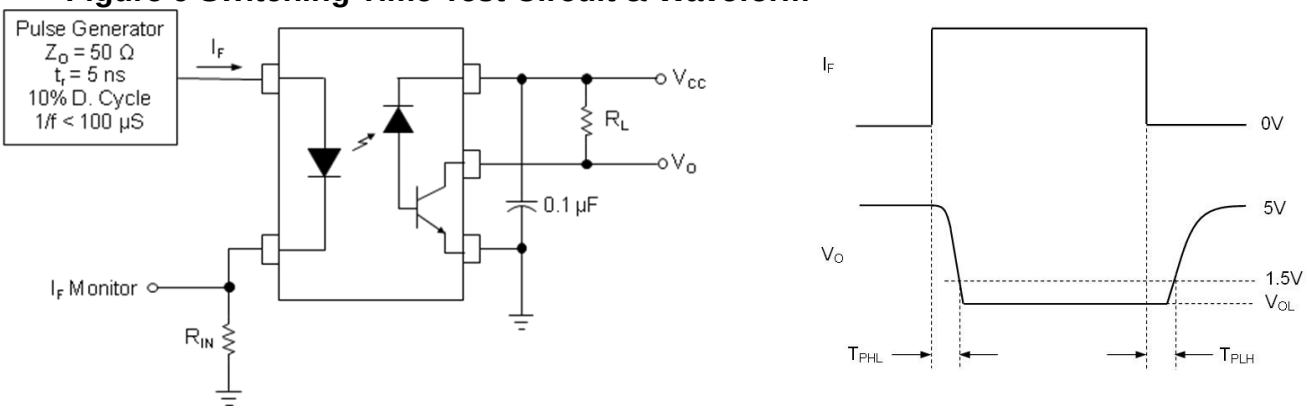

Figure 10 Transient Immunity Test Circuit & Waveform

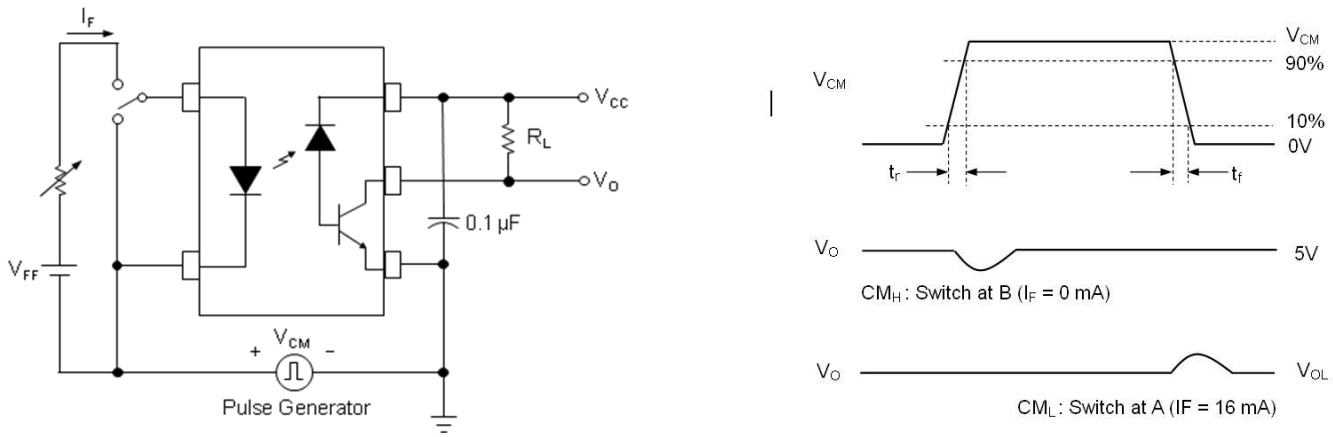

Note:

*3 Common mode transient immunity in logic high level is the maximum tolerable (positive) dVcm/dt on the leading edge of the common mode pulse signal VCM, to assure that the output will remain in a logic high state (i.e., VO > 2.0V).

Common mode transient immunity in logic low level is the maximum tolerable (negative) dVcm/dt on the trailing edge of the common mode pulse signal, VCM, to assure that the output will remain in a logic low state (i.e., VO < 0.8V).

Copyright © 2010, Everlight All Rights Reserved. Release Date : May 13, 2013. Issue No:DPC-0000113 Rev.3

Order Information

Part Number

ELM45X(Z)-V

Note

X = Part No. (2 or 3)
Z = Tape and reel option (TA, TB or none)
V = VDE (optional)

Option	Description	Packing quantity
None	Standard	100 units per tube
-V	Standard + VDE	100 units per tube
(TA)	TA tape & reel option	3000 units per reel
(TB)	TB tape & reel option	3000 units per reel
(TA)-V	TA tape & reel option + VDE	3000 units per reel
(TB)-V	TB tape & reel option + VDE	3000 units per reel

Copyright © 2010, Everlight All Rights Reserved. Release Date : May 13, 2013. Issue No:DPC-0000113 Rev.3

Package Dimension
(Dimensions in mm)

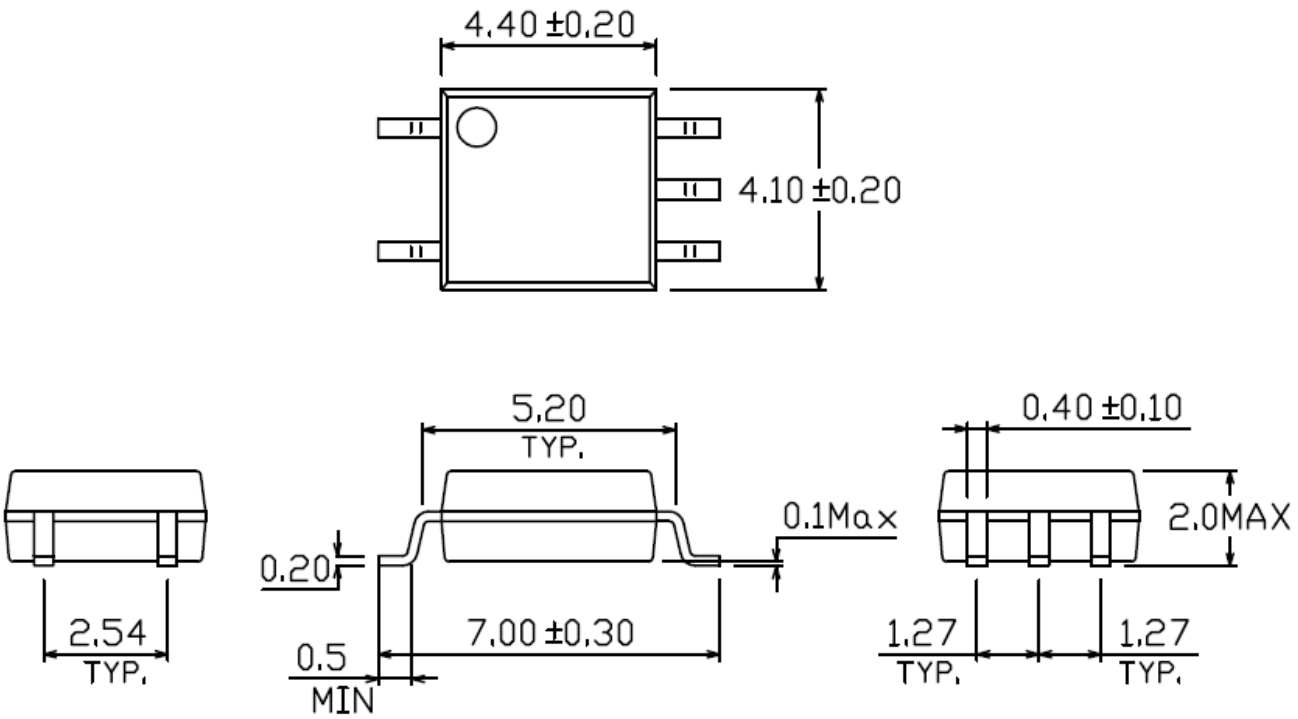

Recommended pad layout for surface mount leadform

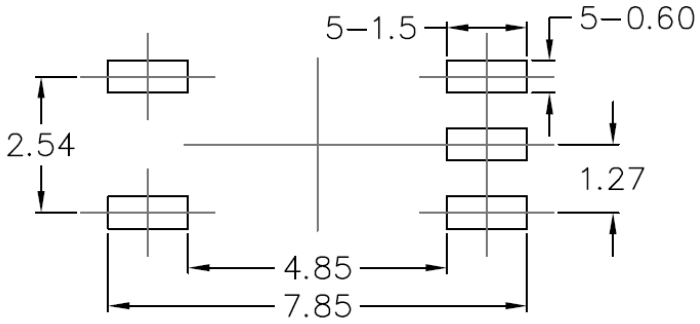

Copyright © 2010, Everlight All Rights Reserved. Release Date : May 13, 2013. Issue No:DPC-0000113 Rev.3

Device Marking

Notes

EL	denotes EVERLIGHT
M453	denotes Device Number
Y	denotes 1 digit Year code
WW	denotes 2 digit Week code
V	denotes VDE (optional)

Copyright © 2010, Everlight All Rights Reserved. Release Date : May 13, 2013. Issue No:DPC-0000113 Rev.3

Tape & Reel Packing Specifications

Option TA

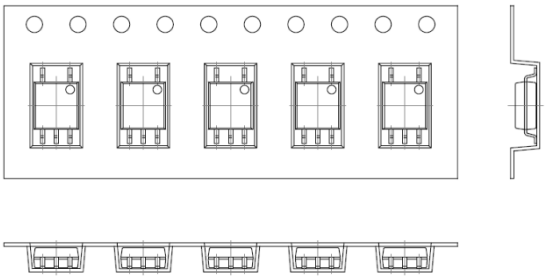

Direction of feed from reel

Option TB

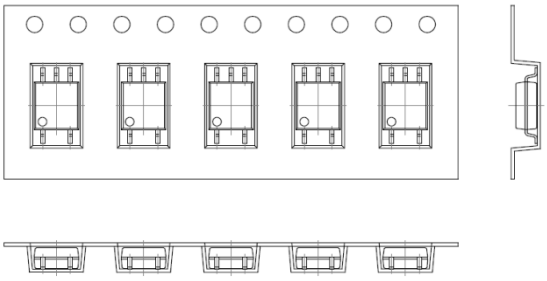

Direction of feed from reel

Tape dimensions

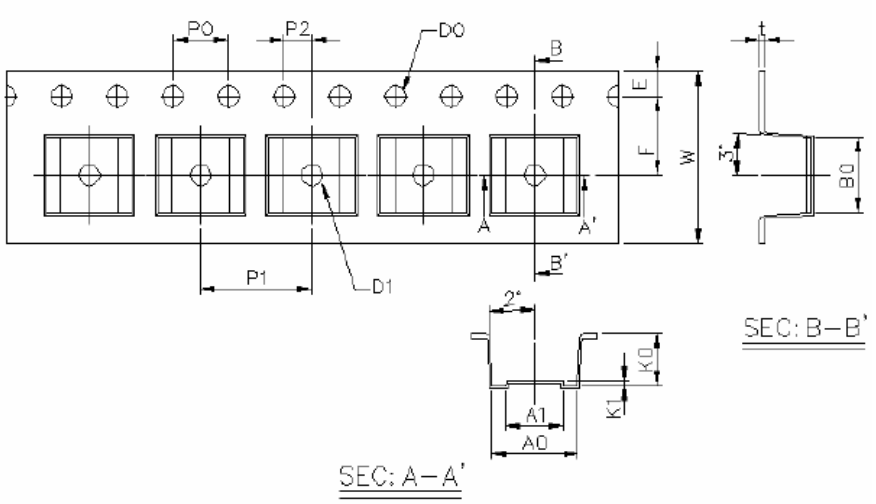

Dimension No.	**A0**	**A1**	**B0**	**D0**	**D1**	**E**	**F**
Dimension(mm)	6.2±0.1	4.1±0.1	5.28±0.1	1.5±0.1	1.5±0.3	1.75±0.1	5.5±0.1
Dimension No.	**Po**	**P1**	**P2**	**t**	**W**	**K0**	**K1**
Dimension(mm)	4.0±0.1	8.0±0.1	2.0±0.1	0.4±0.1	12.0+0.3/ -0.1	3.7±0.1	0.3±0.1

Copyright © 2010, Everlight All Rights Reserved. Release Date : May 13, 2013. Issue No:DPC-0000113 Rev.3

Precautions for Use

1. Soldering Condition

1.1 (A) Maximum Body Case Temperature Profile for evaluation of Reflow Profile

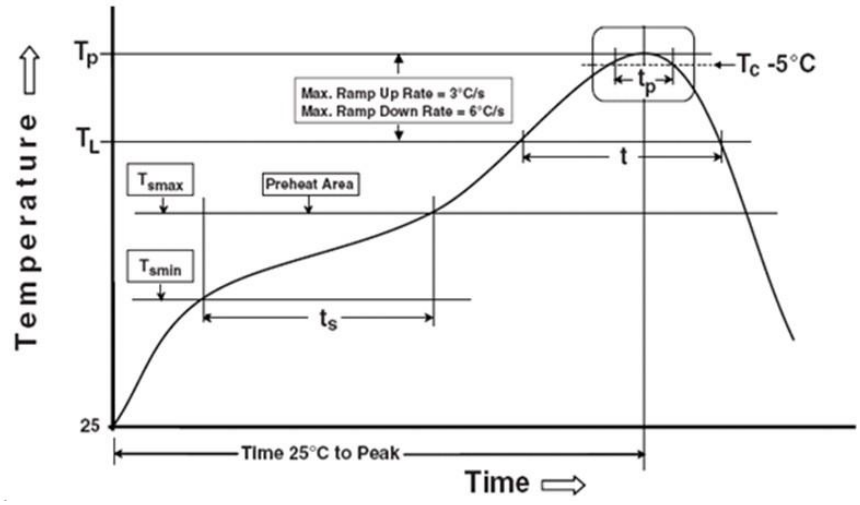

Note: Reference: IPC/JEDEC J-STD-020D

Preheat	
Temperature min (T_{smin})	150 °C
Temperature max (T_{smax})	200°C
Time (T_{smin} to T_{smax}) (t_s)	60-120 seconds
Average ramp-up rate (T_{smax} to T_p)	3 °C/second max
Other	
Liquidus Temperature (T_L)	217 °C
Time above Liquidus Temperature (t_L)	60-100 sec
Peak Temperature (T_P)	260°C
Time within 5 °C of Actual Peak Temperature: T_P - 5°C	30 s
Ramp- Down Rate from Peak Temperature	6°C /second max.
Time 25°C to peak temperature	8 minutes max.
Reflow times	3 times

Copyright © 2010, Everlight All Rights Reserved. Release Date : May 13, 2013. Issue No:DPC-0000113 Rev.3

DISCLAIMER

1. Above specification may be changed without notice. EVERLIGHT will reserve authority on material change for above specification.
2. When using this product, please observe the absolute maximum ratings and the instructions for using outlined in these specification sheets. EVERLIGHT assumes no responsibility for any damage resulting from use of the product which does not comply with the absolute maximum ratings and the instructions included in these specification sheets.
3. These specification sheets include materials protected under copyright of EVERLIGHT corporation. Please don't reproduce or cause anyone to reproduce them without EVERLIGHT's consent.

Copyright © 2010, Everlight All Rights Reserved. Release Date : May 13, 2013. Issue No:DPC-0000113 Rev.3

Looking for pricing, stock, or lifecycle information?

Click below to explore more details on WIN SOURCE:

- View LAN8720AI-CP on WIN SOURCE
- Microchip Technology Information

Optimize Your Supply Chain with WIN SOURCE Solutions

- Global Sourcing Solution
- Obsolete Management
- Cost Control Management
- Shortage Management
- Alternative Solution
- Excess Inventory Management